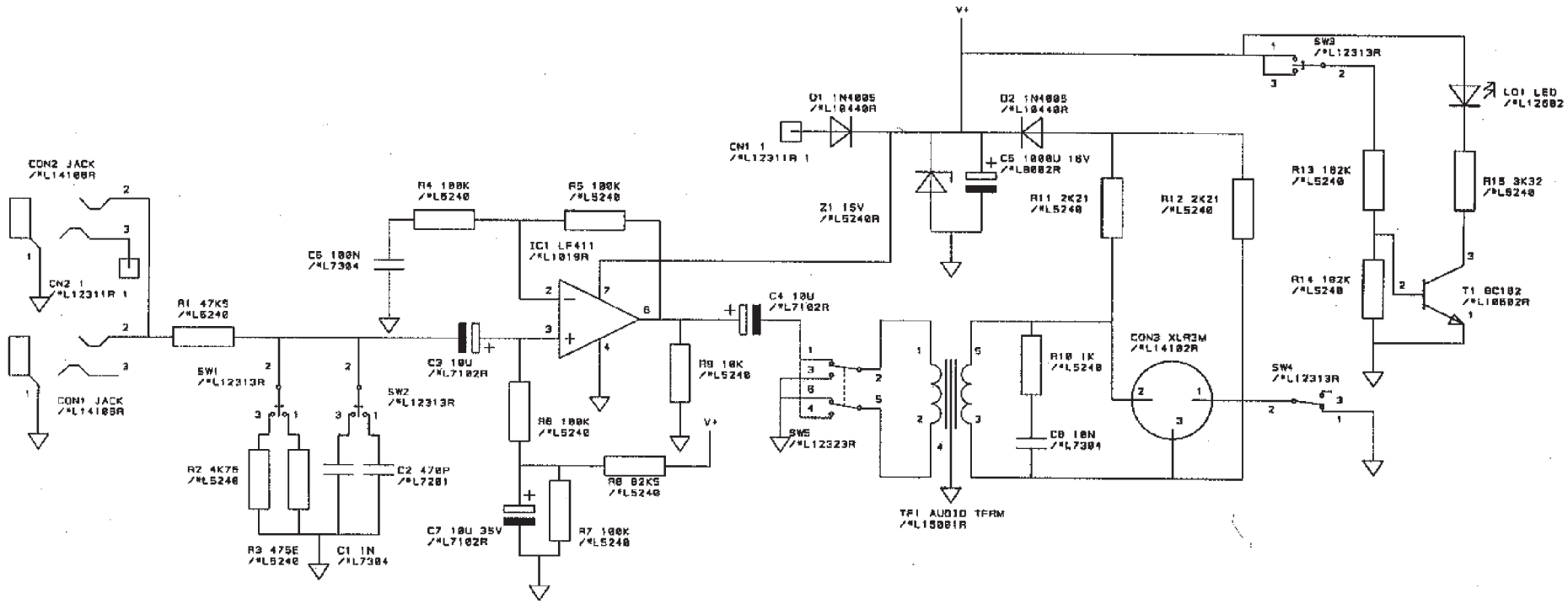

Stage Accompany bv
Hoorn
The Netherlands

Project	: SA20 DI-Box
Print	: -
PCB no.	: -
Date	: -
Drawn	: -
1 page	Revision : -